REEF OCTOPUS
Enhancing Life

VarioS 4

Overview

The Reef Octopus VarioS 4 is a premium, controllable DC circulation/return pump for freshwater and marine aquarium applications that gives you variable speed, quiet/efficient operation, advanced features for automation, and dependable water flow. Much like other Octo VarioS pumps, the VarioS 4 features a detachable controller, a high-quality ceramic shaft and bearings to reduce wear and tear, and the latest variable speed flow technology for refined control, enhanced performance, energy efficiency, and safer operations.

Unlike the vast majority of circulation pumps which use alternating current (AC), the VarioS 4 pump boasts several key advantages over traditional AC pumps, namely, higher energy efficiency, safer operations at a working voltage of 24V, less heat produced with every volume of water flow and most notably, the variable speed control to adjust the flow rate.

With the bespoke controller, users have full control over the flow rates by selecting five preset speed settings and a 15 or 60-minute feed mode can also be engaged or disengaged with the push of a button.

The VarioS 4 is not a pressure rated pump. Not suited for second floor applications or to feed Beckett or downdraft skimmer where constant pressure is required.

Features & Benefits

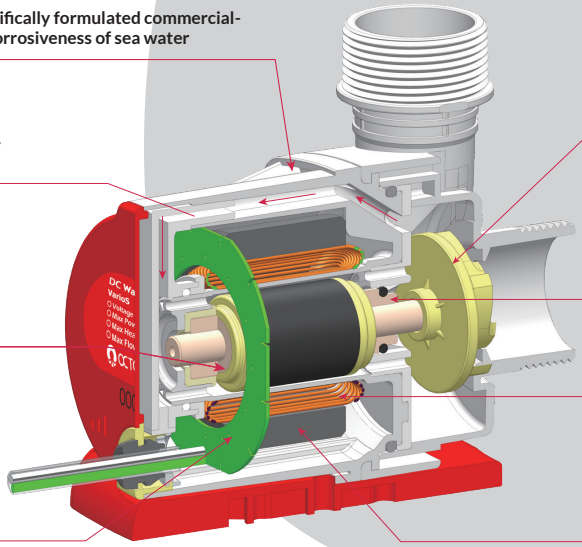

1. PC+PET/50058 (Eastman Chemical) specifically formulated commercial-grade material meant to withstand the corrosiveness of sea water
2. Internally moulded waterways to further enhance pump cooling ability
3. Anti-friction design for a much lower rolling resistance to increase efficiency
4. Stator coiling is designed and developed in-house to ensure reliable and stable performance
5. PA66-8018L (Dupont) commercial-grade rotor
6. Aluminium oxide ceramic shaft and bushings for quieter and stable operation
7. Slotless brushless motor produces higher torque and minimizes vibration
8. No electronic components within the pumps body for enhanced reliability

- Internal or External Installations
- Super Quiet Operation
- 3rd Party 0-10V Controller-capable
- Safe and Efficient
- Variable Speed Control Settings
- Float Switch Capability
- Safe for Both Freshwater & Marine
- 5-Year Limited Warranty

*Results will vary depending on aquarium setup.
All images shown are for illustration purposes only. Actual product may vary due to product enhancement.

REEF OCTOPUS
Enhancing Life

VarioS 4

Flow Rate Chart

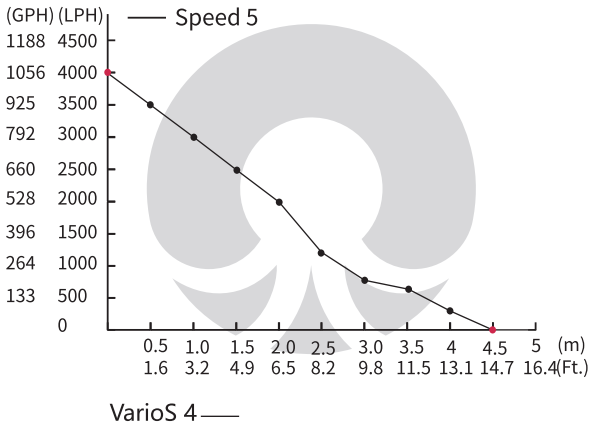

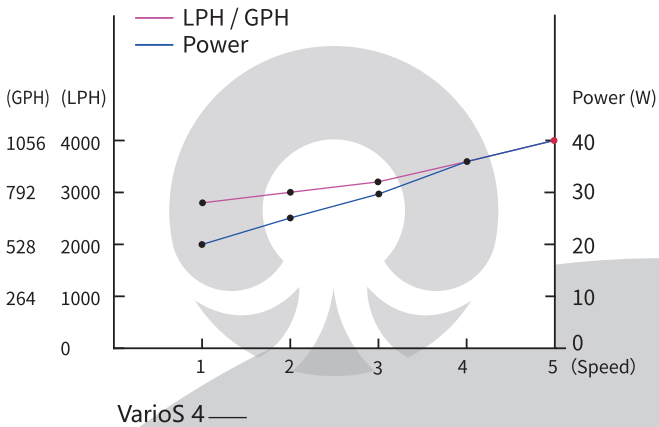

Pump Dimensions

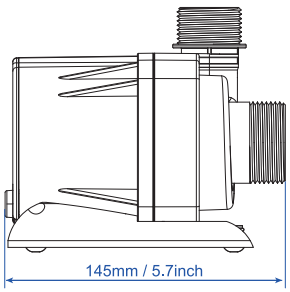

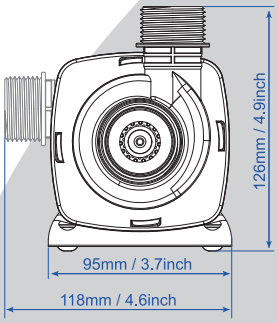

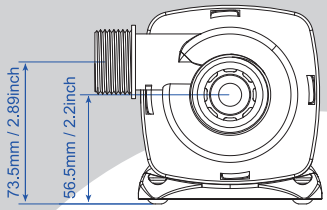

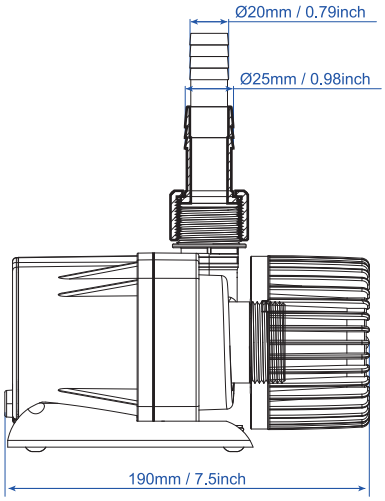

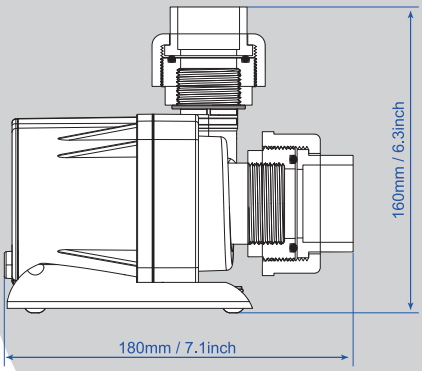

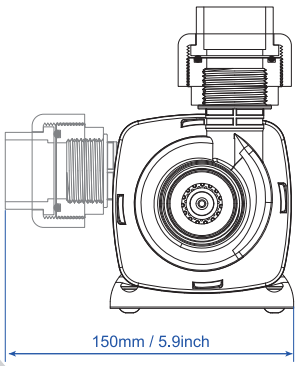

Product Specification

Item #	Product	Voltage	Wet/Dry	Power	Maximum Head Height		Maximum Flow Rate		Connection Size		Fresh Water/Marine	Maximum Immersion Depth		Pump Cable Length		AC/DC Adapter Cable Length		Power Cable Length		Pump Ambient Temp		Controller Ambient Temp	
				W	m	Ft.	LPH	GPH	Inlet	Outlet		m	Ft.	m	Ft.	m	Ft.	m	Ft.	°C	°F	°C	°F
110102	VarioS 4	DC 24V	Both	20-40	4.5	14.7	4000	1056	Φ40mm 1-1/4"	Φ32mm 1"	Both	0.8	2.6	2.0	6.6	1.5	4.9	1.5	4.9	1-40	33-104	0-30	32-86